HJBM PLUS 25 T2 0,37kW

GENERAL DATA

SQUARE WALL PLATE FAN, VARIABLE PITCH BLADES AND HIGH EFFICIENCY MOTOR

MANUFACTURING FEATURES
• Square plate made of galvanized steel sheet with polyester painting.
• Variable pitch angle polyamide impeller reinforced with fibreglass.
• Supplied with motor support and protection guard according to the UNE-EN 20-359-74 norm and the ROHS 2002/95/EC Directive (Restriction of the Use of Certain Hazardous Substances in Electrical and Electronic Equipments).
• High efficiency standard asynchronous squirrel-cage motor with IP-55 protection (wiring box IP-65) and Class F insulation. Manufactured with standard voltages: 230V 50Hz for the single phase motors and 230/400V 50Hz for the three phase motors.

APPLICATIONS
Designed for wall assembly, they are suitable for:
• Air renewal in buildings and industries.
• Maximum working temperature: single phase 50ºC, three phase 60ºC.

UNDER REQUEST
• Aluminium impeller.
• 60Hz fans.

PERFORMANCE CURVE

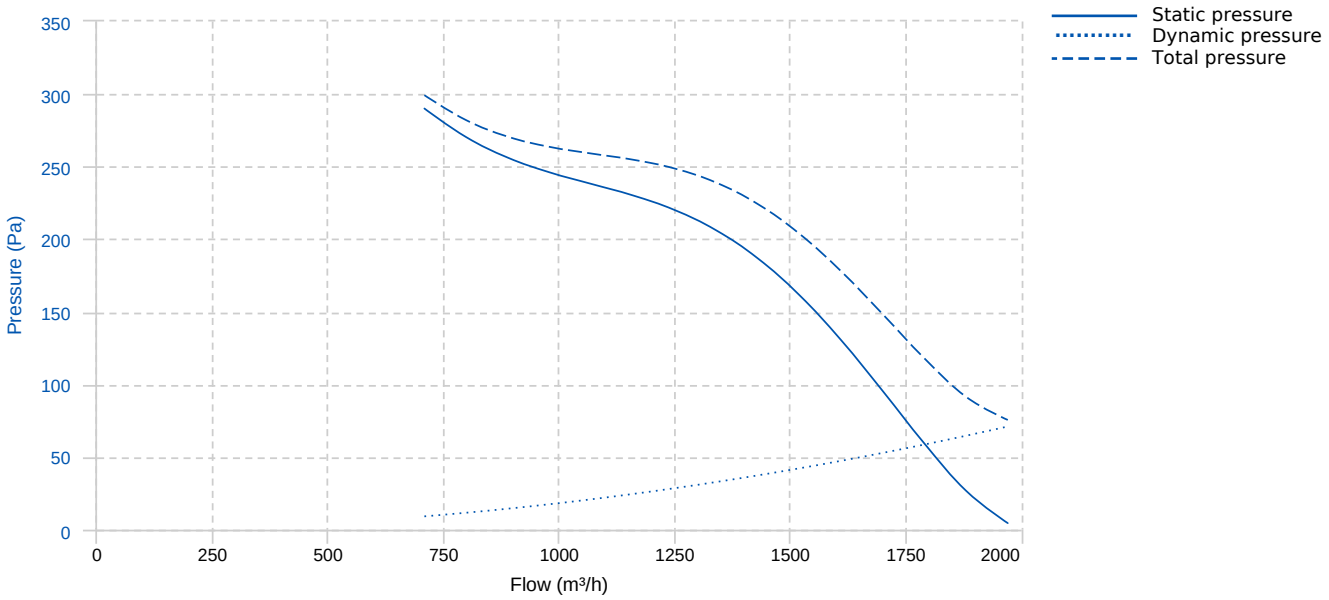

TECHNICAL DATA

Fan							
RPM	2800	Approx. weight	4.5 kg	Max. Flow	1980 m³/h		
Motor							
Power	0,37 kW	RPM	2800	I max. (230V)	1,58 A	I max. (400V)	0,91 A
Size	71	Approx. weight	5.7 kg				

ERP DATA

Fan data sheet		
Fan type	Axial fan	
Installation category	A: Outlet and Inlet free discharge	
Efficiency category	Static	
The fan has to be installed with VF	No	
Motor power (kW)	0.37	
	Fan values	**ERP Requirements 2015**
Max. efficiency (%)	30.6	29.83
Efficiency grade (N)	40.77	40
Pabs (kW)	0.246	
Flow (m³/h)	1296.4	
Static pressure (Pa)	213.51	
Speed (m/s)	2800	
Specific ratio	1.00	

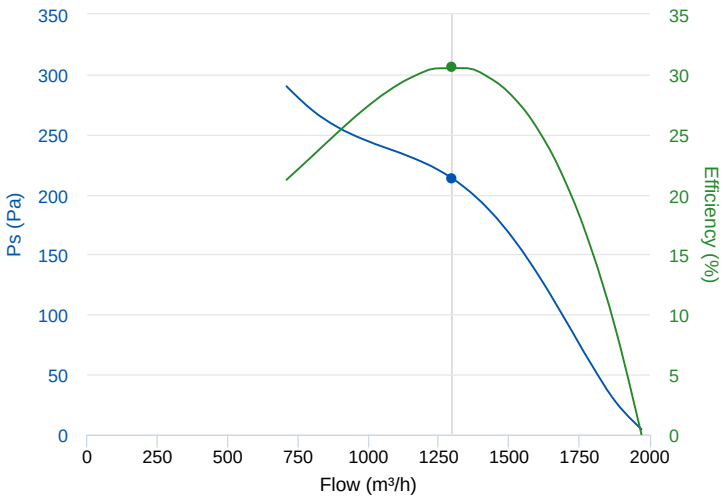

DIMENSIONS

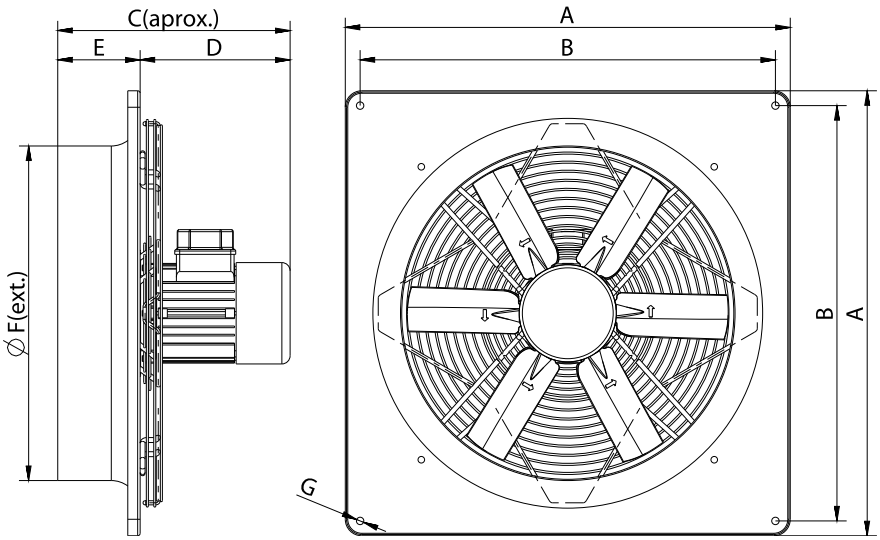

Dimensions (mm)									
A	370	B	320	C	298,5	D	220,5	E	78
ØF	253	ØG	7						

WIRING DIAGRAM

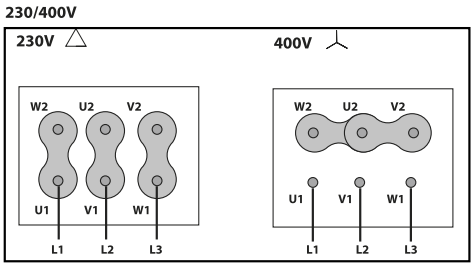

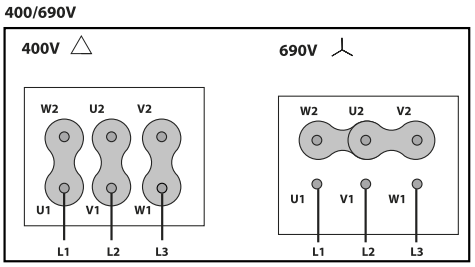

ACCESSORIES

SAFETY SWITCH
INT 25 3P A
REF: INT253PA

Outlet protection guard for axial fans
RP0 25
REF: 980000025

PLASTIC GRAVITY SHUTTER
PCP 25
REF: 963200105

FREQUENCY SPEED CONTROLLER
SFC 230 I 2,5A *
REF: SFC230I003

FREQUENCY SPEED CONTROLLER
SFC 400 III 1,2A *
REF: SFC400III1